

Ground Offset Simulator

GOS 05C30

- ISO 16750-2
- FMC 1278
- VS-00.34-L-10002

Features

> 5.7-inch color touchscreen front panel operation
> Designed to simulate ground offset and power supply offset across multiple power supply lines
> Independent dual-channel output, voltage range of -5 V ~ +5 V, with Max. current 30 A
> Built-in fault alarm function
> Supports remote PC control and test report printing via an Ethernet (RJ45) interface

Introduction

The GOS 05C30 Ground Offset Simulator is designed in accordance with ISO 16750-2:2023, FMC 1278, and VS-00.34-L-10002. It can simulate ground offset and power supply offset across multiple power supply lines to verify the reliable operation of components.

The GOS 05C30 supports independent dual-channel output, with output voltage range of −5 V ~ +5 V and the maximum output current of 30 A.

Application Areas



Technical Parameters

Output Voltage	-5 V ~ +5 V
Output Voltage Accuracy	±10% (full scale)
Output Voltage Offset at 0 V	±0.1 V
Voltage Step	0.1 V
Rated Current	30 A
Voltage Ramp-up Time	<5 μs (0 V ~ 5 V DC)
Analog Signal Input	BNC, Max. ±2 V, depending on the instrument configuration
Amplification Ratio for External Signal	1: 10
Frequency	DC ~ 10 kHz
Number of Channels	Independent dual-channel output (maximum power per channel: 150 W)
Duration	1 s ~ 9,999 s
Protection Circuit	Overvoltage, overcurrent and overtemperature protection
Trigger Mode	Automatic

General Parameters

Display Screen	5.7-inch TFT touchscreen
Working Power	AC 100 V ~ 240 V, 50/60 Hz
Fuse	6 A
Max. Power Consumption	500 W
Communication Mode	Ethernet RJ45 interface
Working Status Indication	LED indication and LCD display in front panel
Failure Detection	LCD display in front panel and stop work when failure occurs
Dimension	450 (W) ×380 (H) × 620 (D) mm
Weight	Approx. 40 kg
Ambient Temperature	15°C ~ 35°C
Relative Humidity	45% ~ 75%
Atmospheric Pressure	86 kPa ~ 106 kPa

Standard Accessories

User Manual, Power Cord, Fuse, Test Cables, Grounding Wire

Optional Accessories

1	Immunity Test Software	Model: AutoLab > Compatible with Windows 7/8/10/11 > User-friendly operation with an intuitive UI > Supports customized test procedures with built-in standard test libraries > Comply with ISO 21498-2, VW 80300	
2	Four-Quadrant Power Supply Voltage Variation Simulator	Model: APS Series Max. test voltage: 80 V Max. test current: 400 A	

Test Connection

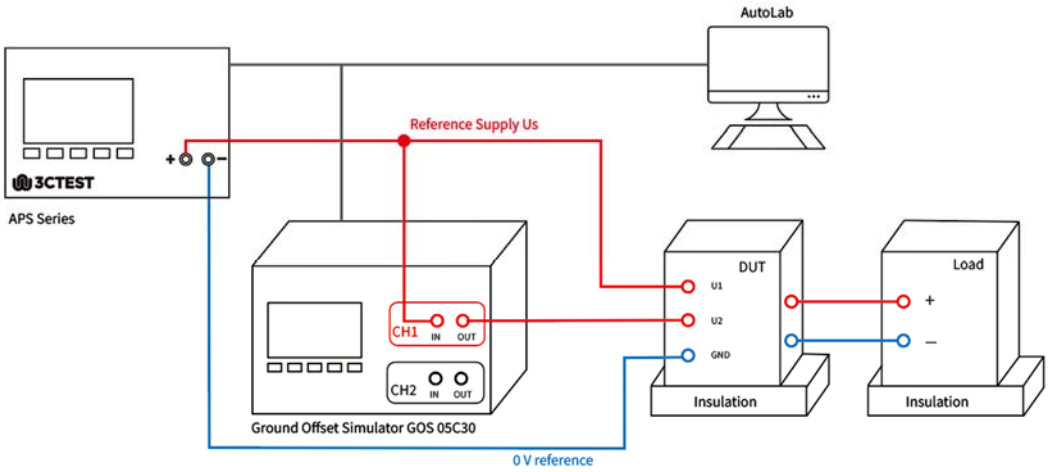

Supply Offset Test

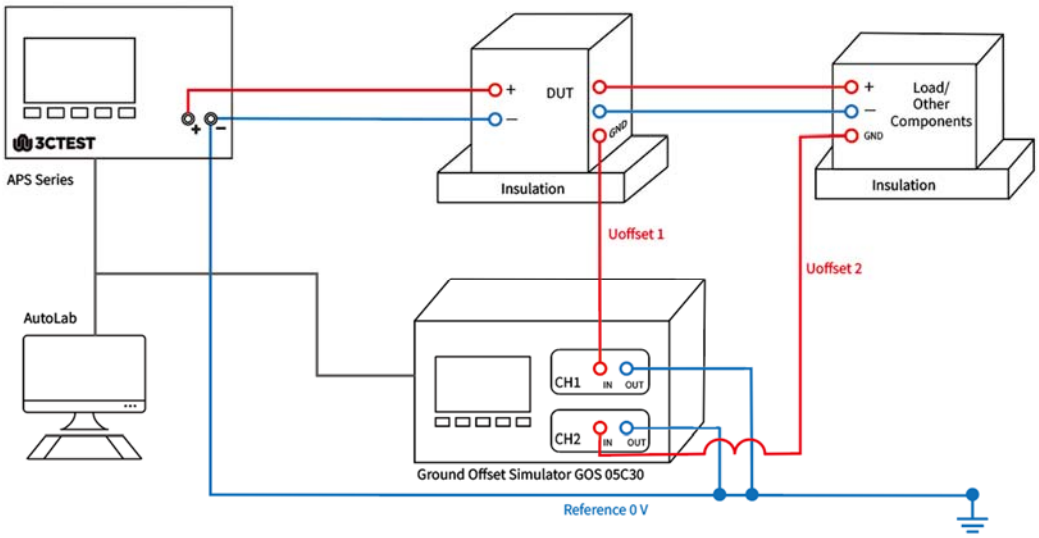

Ground Offset Test

SUZHOU 3CTEST ELECTRONIC CO., LTD.

Address: No. 99 E'meishan Road, SND, Suzhou, Jiangsu Province, China
E-mail: globalsales@3ctest.cn
Service: service@3ctest.cn
Tel: +86 - 512 - 68077192
Web: www.3ctest.com

3CTEST is always striving for product innovation and quality improvement. Product appearance and technical specifications are subject to change without further notice.